Drilling Pattern for HCR 1200 ED II

Dimensions in Inches

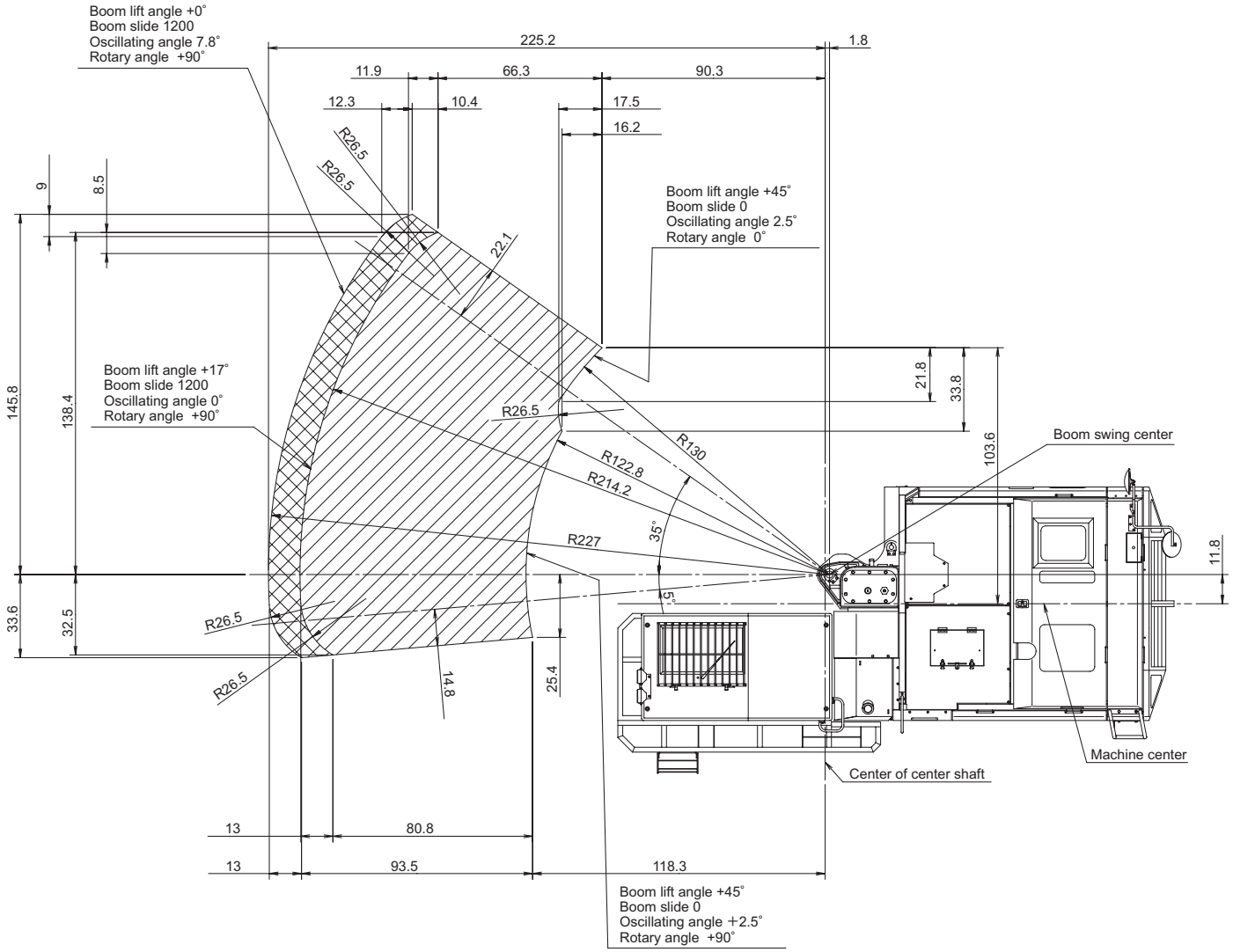

Vertical Drilling on Horizontal Plane

Vertical Drilling

FURUKAWA ROCK DRILL USA
ROCK DRILL DIVISION